Best Lock choice for Professional Access Control

MODEL 90XP

Model 90XP is special design for auto-door, cut off free. With the function of time delay, NO/NC.

Technical characters:

Operating Voltage:12VDC
Operating Current:0.17A
Holding force: 90kg/150lbs
Time Delay:0-90S
Weight: 0.7Kg
Face Dimension: 66x38x30mm
Cover Dimension: 64x38x11mm

Wiring Instruction

Red:+12V
Black:GND
White:COM
Yellow:N.C
Blue: N.O

Installation Introduction

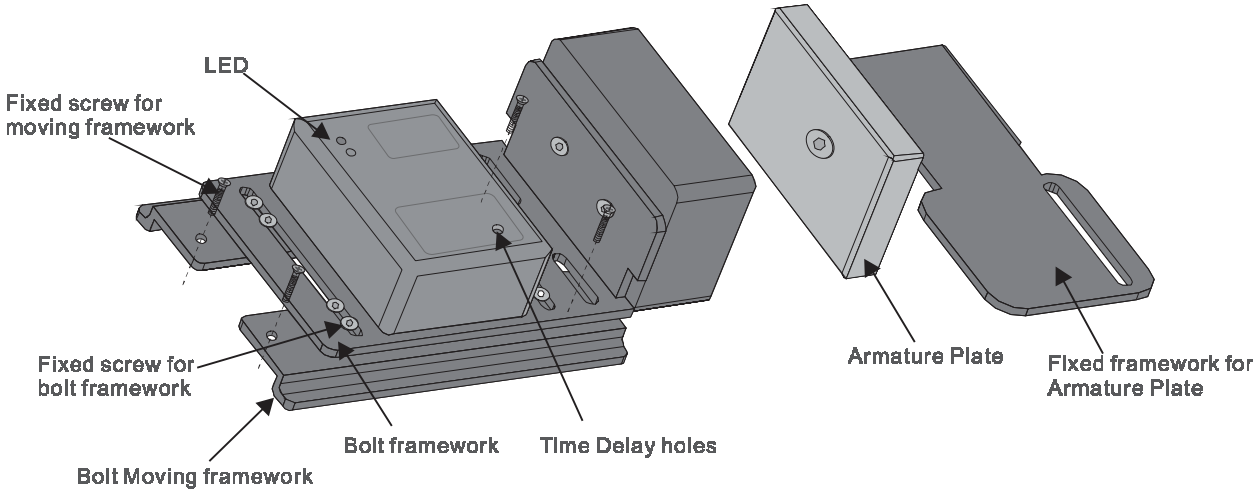

Model 90XP can be applied many kinds of auto-doors, you can install it as follows:
Step a: Adjust the distance between Bolt Moving Plate and Groove, and then fix the bolt.
Step b: Fix the fixed screw for bolt framework on its Bolt Moving framework.

How to install Armature Plate?
You just need to fix the fixed framework for Armature Plate on the fixed groove of the auto-door, and you can also dill the holes on the framework to suit different installation grooves.

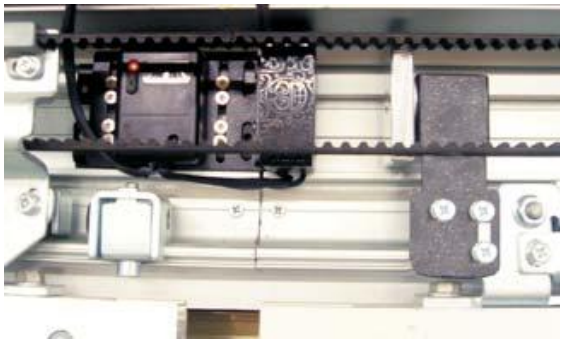

Installation Side View